TEG 100

TRANSIENT EMISSION GENERATOR

The relating standards:*
ISO 7637-2
CISPR 16-1-2

** The TEG 100 test set can be used for certain tests within these standards. Additional equipment might be required. For detailed information, please contact sales@spitzenberger.de.*



TEG 100 test set

- ✓ Modular test set for transient emission measurements
- ✓ Control unit with 7” touchscreen
- ✓ Electronical switch up to 100 A
- ✓ Mechanical switch up to 100 A
- ✓ Artificial network
- ✓ Shunt resistor
- ✓ Switch operating counter
- ✓ Unit control via webinterface and interface commands
- ✓ Test and evaluation software available

TEST SET FOR AUTOMOTIVE APPLICATIONS

TOUCHSCREEN USER INTERFACE

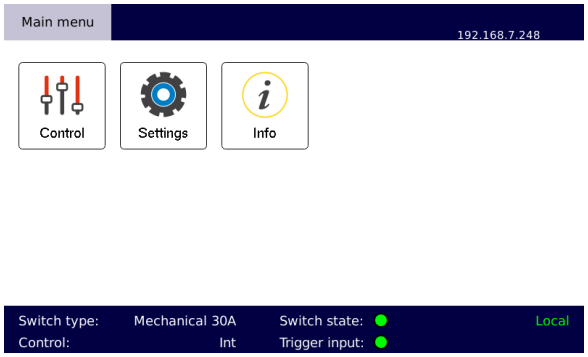

Fig.1: Main menu

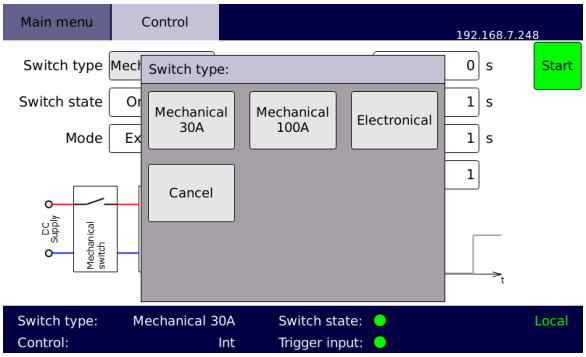

Fig. 2: Switch type

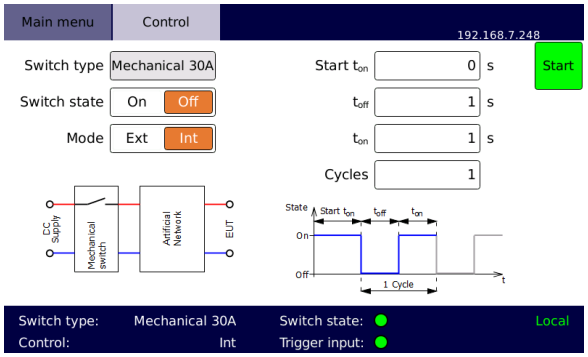

Fig.3: Mechanical switch

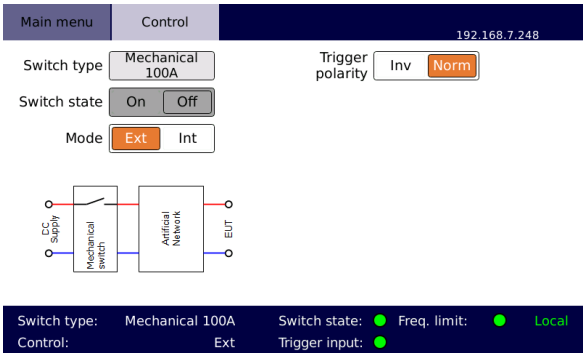

Fig. 4: External trigger

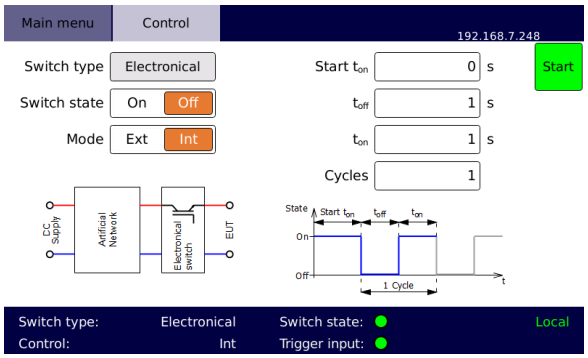

Fig. 5: Electronical switch

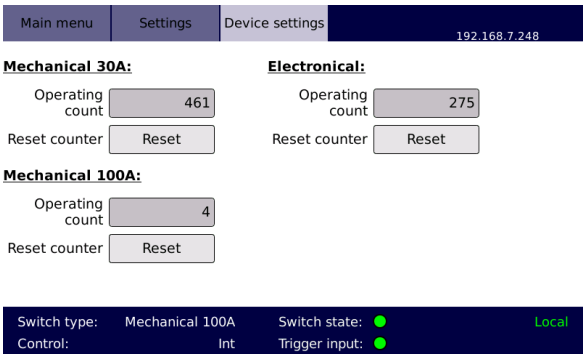

Fig. 6: Device settings

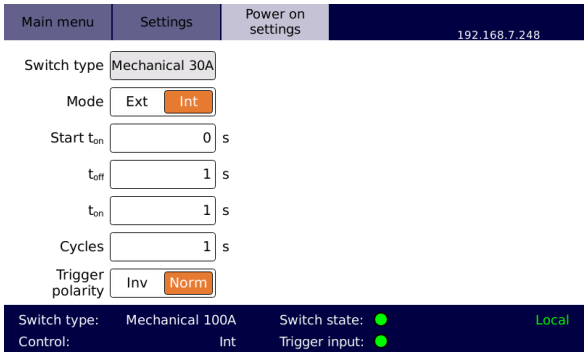

Fig. 7: Power on settings

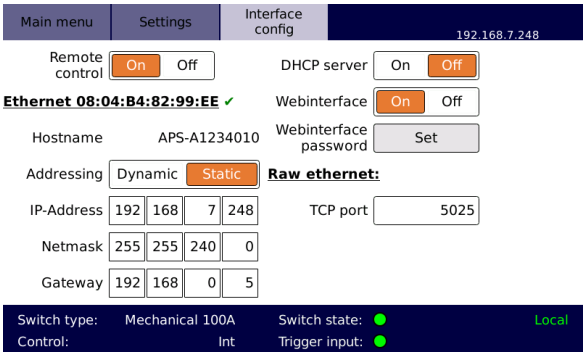

Fig. 8: Interface configuration

SPS TestManager

- ✓ Test and evaluation software for fully compliant emission and immunity tests
- ✓ Automated test run of various IEC and automotive standards

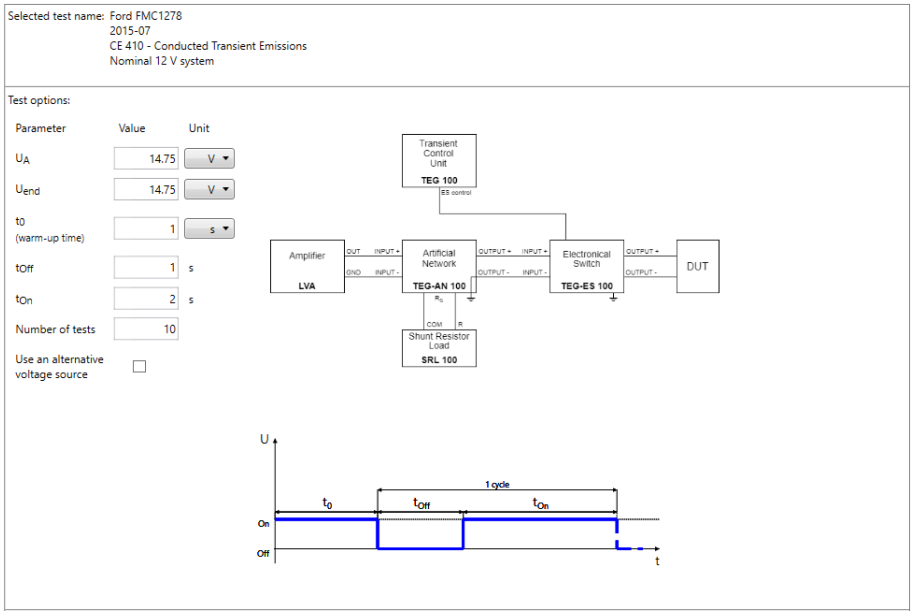

Fig. 9: SPS TestManager software

Command interface

- ✓ Easily integrate the device into your own software applications
- ✓ Remote control commands are based on the SCPI standard

Webinterface

- ✓ Monitor and control the connected device via a web browser

Test setup for slow pulses

For the measurement of slow transients according to ISO 7637, the switch (mechanical switch TEG-MS 100/30) has to be located on the power supply side of the artificial network. Principle test setup for slow pulses is shown in Fig. 10 and Fig. 11 below.

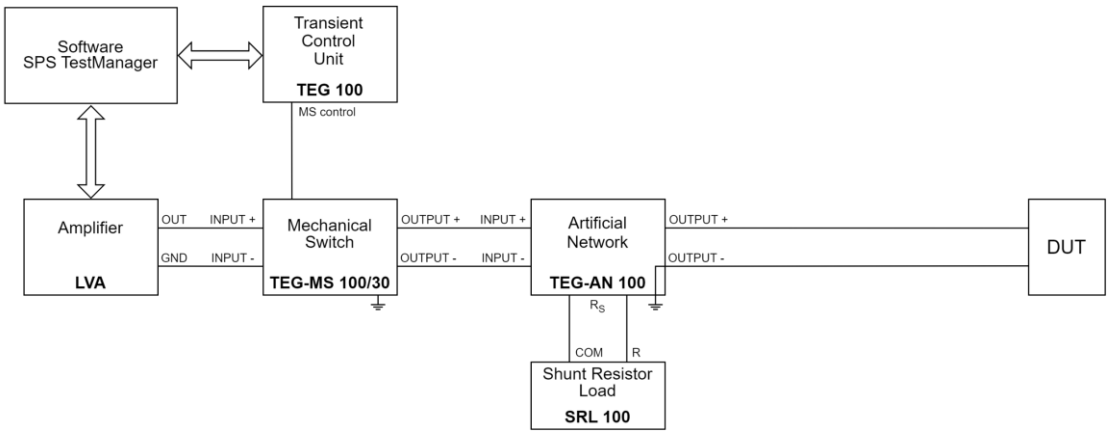

Fig. 10: Principle schematic for test setup with mechanical switch



Fig. 11: Sample transient emission test setup with mechanical switch

Test setup for fast pulses

For the measurement of fast transients, the switch (electronical switch TEG-ES 100) is located on the DUT side of the artificial network. Principle test setup for slow pulses is shown in Fig. 12 and Fig. 13 below.

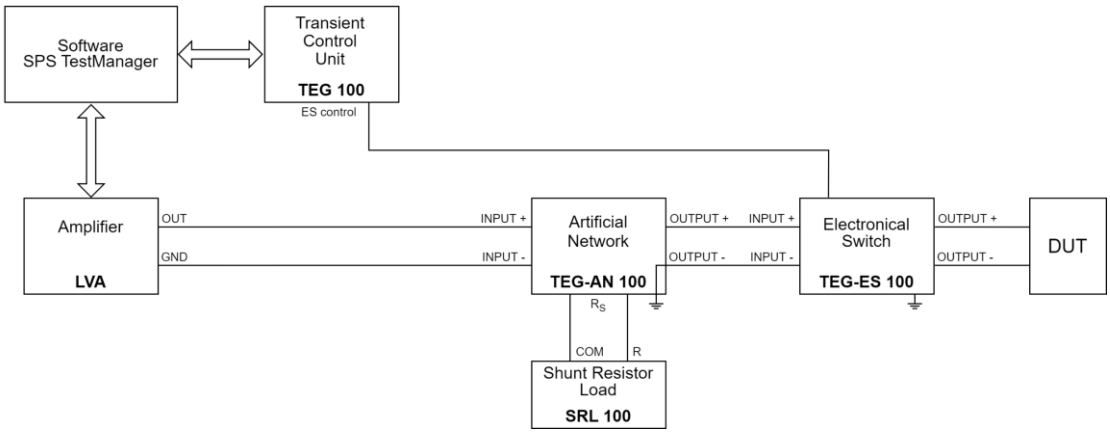

Fig. 12: Principle schematic for test setup with electronical switch



Fig. 13: Sample transient emission test setup with electronical switch

TECHNICAL DATA - TEG 100 control unit

		TEG 100
Internal control unit		
	Display	7.0" touchscreen (17.8 cm, resolution 800 x 480)
	User interface	touchscreen / front panel button / incremental encoder webinterface
Interface		Ethernet 100 Mbit/s (HiSLIP SCPI) USB 2.0 Host
Pre on time *(start t_{on})*		0 s … 1000 h
On time *(t_{on})*		100 ms … 1000 h
Off time *(t_{off})*		100 ms … 1000 h
Cycles		1 … 65535
Trigger In *(female BNC)*		+ 5 V … + 24 V (adjustable to trigger at rising or falling edge)
Trigger Out *(female BNC)*		+ 5 V TTL level
Insulation resistance		> 1 MΩ
Peak withstand voltage *(max. 10 s, trigger connectors to earth)*		> 2000 V
Power supply *(±10 %, 50/60 Hz)*		230 V
Line protection, connection		2 A, Schuko
Housing		desktop unit, light grey (RAL 7035)
	approx. dimensions (H x W x D)	172 x 222 x 125 mm
Weight	*(approx.)*	2.6 kg



Fig. 14: TEG 100 control unit

TECHNICAL DATA – TEG-ES 100 electronical switch

	TEG-ES 100
DC operating voltage *(max.)*	100 V
Break down voltage	> 400 V
DC operating current *(max.)*	100 A
Short circuit current capability *(1 ms)*	300 A
Voltage drop at 25 A	≤ 2 V
Switching time Δt_s	300 ns ± 20 % (at 13.5 V with reference load R = 0.6 Ω, L = 50 µH at 1 kHz)
Protection	short circuit / overtemperature / overvoltage (varistor)
Input / output connector	100 A, 6 mm socket
Insulation resistance	> 1 MΩ
Peak withstand voltage *(max. 10 s, input / output to earth)*	> 2000 V
Cooling	temperature-controlled forced air cooling
Housing	desktop unit, light grey (RAL 7035)
approx. dimensions (H x W x D)	200 x 210 x 90 mm
Weight *(approx.)*	2.4 kg



Fig. 15: TEG-ES 100 electronical switch

TECHNICAL DATA – TEG-MS 100/30 mechanical switch

		TEG-MS 100/30
DC operating voltage ***(max.)***		
	mechanical 30 A	28 V
	mechanical 100 A	500 V
DC operating current ***(max.)***		
	mechanical 30 A	30 A
	mechanical 100 A	100 A
Input / output connector		100 A, 6 mm socket
Insulation resistance		> 1 MΩ
Peak withstand voltage *(max. 10 s, input / output to earth)*		> 2000 V
Housing		desktop unit, light grey (RAL 7035)
	approx. dimensions (H x W x D)	200 x 210 x 90 mm
Weight	*(approx.)*	2.1 kg



Fig. 16: TEG-MS 100/30 mechanical switch

TECHNICAL DATA – TEG-AN 100 artificial network

	TEG-AN 100
Frequency range	100 kHz … 150 MHz
DC voltage *(max.)*	1000 V
Voltage *(@ 50/60 Hz, max.)*	400 V
Voltage *(@ 400 Hz, max.)*	300 V
Continuous current *(max.)*	200 A
Impedance	(5 µH + 1 Ω) || 50 Ω ±10 %
Resistance of coil	< 5 mΩ
Impedance at 50 Hz	4.2 mΩ
Impedance at 400 Hz	13 mΩ
Connector EUT	100 A, 6 mm socket
R_S connector	4 mm laboratory socket (for SRL 100)
RF output	BNC
Housing	desktop unit, light grey (RAL 7035)
approx. dimensions (H x W x D)	164 x 160 x 358 mm
Weight *(approx.)*	4.4 kg



Fig. 17: TEG-AN 100 artificial network

The TEG-AN 100 artificial network can be used to measure interference voltage up to 150 MHz. The “Mains filter capacitor” switch must be set to CISPR 16-1-2 to enable the 1 µF input capacitor to filter external mains disturbances for CISPR 16-1-2 interference voltage measurements. For transients measurements according to ISO 7637-2, the “Mains filter capacitor” switch must be set to ISO 7637-2, or else the filter could short transients. To measure the interference the switch must be set to “Measure”, otherwise the line has an internal 50 Ω termination.

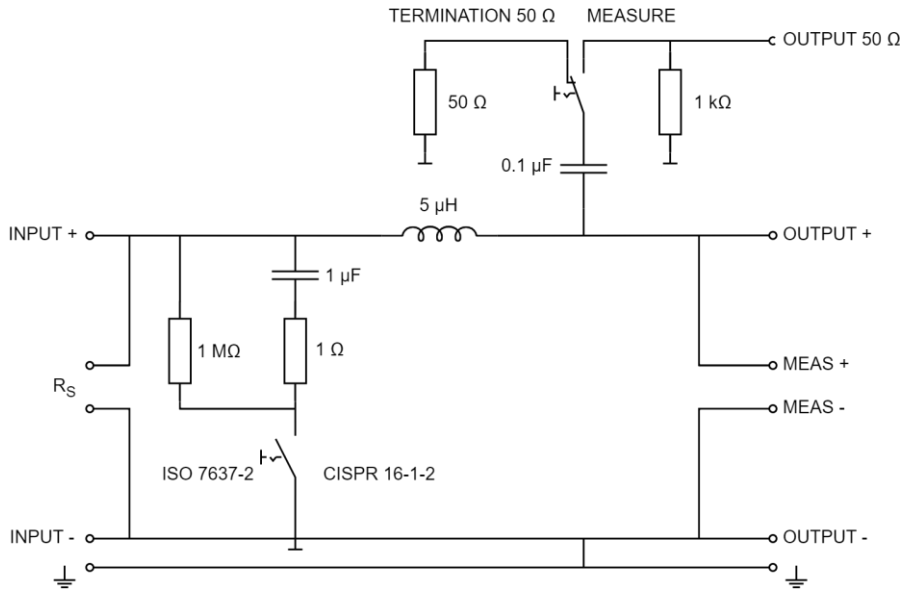

Fig. 18: Principle schematic of TEG-AN 100

TECHNICAL DATA – SRL 100 shunt resistor load (optional)

	SRL 100
Resistor Type	non-inductive
Resistor values	10 Ω / 20 Ω / 40 Ω / 120 Ω (±5 %)
Power *(cont.)*	50 W
Protection	overtemperature
Insulation resistance	> 1 MΩ
Cooling	passive through housing
Housing	desktop unit, black
approx. dimensions (H x W x D)	80 x 145 x 225 mm
Weight *(approx.)*	1.4 kg

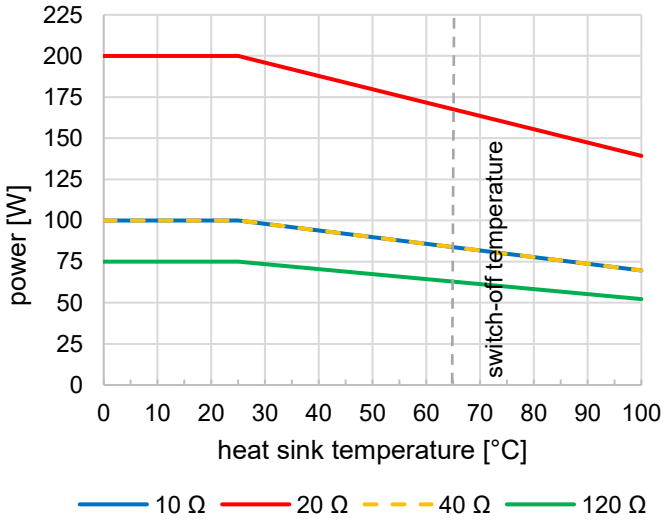

Fig. 20: Maximum power as a function of the heat sink temperature



Fig. 19: SRL 100 shunt resistor load

GENERAL

	TEG 100 test set
Ambient temperature	+10 °C up to +40 °C
Storage temperature	-25 °C up to +60 °C
Relative humidity	non condensing, max. 80 % for temperature < 31 °C, decreasing linearly to 50 % at 40 °C
Ingress protection	IP20

OPTIONS AND ACCESSORIES

Options		
OPT.SRL.100	SRL 100	Shunt resistor load

© Spitzenberger & Spies 2026 – Subject to change without notice.